WOODWORKER'S JOURNAL POWER TOOL MAINTENANCE
OVER 150 PHOTOS AND OVER 60 MINUTES OF VIDEO on 1 DVD-ROM
CLICK HERE TO BUY!

SUBSCRIBE TO
Woodworker's Journal Now!
(https://subscribe.wo journa
cds_mag_cod /WJ&cds_page_id=
Subscribe

TURNING A THREADED LID FOR A BOX

BY ERNIE CONOVER (HTTP://WWW.WOODWORKERSJOURNAL.COM/AUTHOR/ERNIE/) • JAN 7, 2015

Chasing threads is the turning technique of cutting threads with a set of tools called chasers.

Threading wooden pieces dates back to Egyptian times and is well- documented from the 1600s on. There are two ways to make them. One is with a thread box and tap (it would be a tap and die for metal thread cutting). Thread boxes are sold in standard sizes. You simply drill a hole in a piece of wood and turn the tap into it to create an inside, or female, thread. The thread box (die) is placed on the end of a piece of dowel and turned to allow a very sharp, V-shaped cutter to create the outside, or male, thread. Plenty of oil helps to cut cleaner thread; mineral, raw linseed or cooking oil all work very well.

The second way to make threads in wood is to chase them in a wood lathe with a set of tools called “chasers,” which are really a set of scrapers that will produce a screw thread when presented to a piece of wood turning slowly in the lathe. In the main photo above, you see a set of modern Mayes & Warwick 16-pitch chasers on top of a gaggle of antique 19th century chasers that were used for threading brass parts for microscopes and telescopes. Mayes & Warwick and Sorby are modern manufacturers of chasers.

ADVERTISEMENT

ADVERTISEMENT

YOU MIGHT ALSO LIKE:

(http://www.woodworkersjournal.com/wp-content/uploads/thread-chasers.jpg)

One chaser is for outside threads, and the other is for inside. My copy of The Lathe and Its Uses by J. Lukin, published by John Wiley & Son, New York, in 1868, gives exact instructions for chasing threads that could have been written yesterday. Not much has changed in this technique!

Still, it may be new information to you, and before we explore how chasers work, we need to familiarize ourselves with threads in general.

Anatomy of a Thread

In the illustrations (below) you see an external thread in the top Drawing and a cutaway of an internal thread in the middle Drawing. The “pitch” of the thread is the distance from crest to crest. In the English system, it is the number of crests that lie within one inch. In the metric system, it is the distance in millimeters between two adjacent crests.

The most common thread profile is for the flanks to form a 60° angle at the crest and root. The “crest” is the highest point on a thread and can be thought of as the top of a mountain, whether it is an external or internal thread. The “root” is the lowest point in either case. Some confusion can arise because the crest of an external thread is the greatest diameter and the crest of a mating internal thread is the least diameter. After WWII, the terms “major” and “mi- nor” diameter, regardless of the gender of the thread, were adopted to avoid this confusion. However, most of us old codgers, who learned from even more ancient codgers, still use crest and root.

While my drawing shows the 8-pitch thread forming a sharp edge at the crest and root, this is seldom the case, especially in metal, because the resulting thread would be very easily damaged and difficult to handle due to the sharp edges. In metal, both crest and root are generally truncated so as to form a flat. In a wood thread, it is OK to have a sharp root, but a truncated crest is a great benefit. Internal threads have the crest and root diameters reversed from the external ones. The crest, however, is what still needs to be truncated in either case.

Turning Salad Forks
(http://www.woodworkersjournal.com/turni
salad-forks/)

Japanese Kendama Gift Project
(http://www.woodworkersjournal.com/japar
kendama-gift-project/)

Scrapers: A Simple Tool with Many
Uses
(http://www.woodworkersjournal.com/scrap
simple-tool-many-uses/)

Setting Up a Turning Shop
(http://www.woodworkersjournal.com/setti
turning-shop/)

Sign Up ›

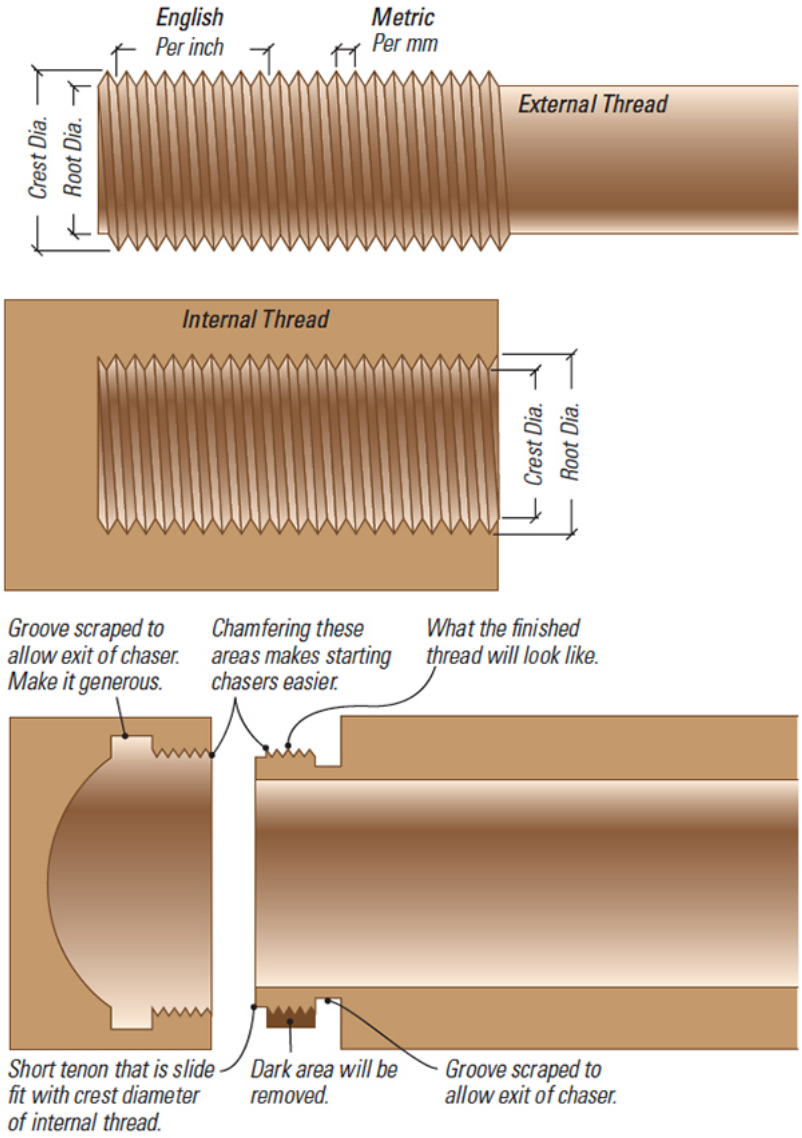

(http://www.woodworkersjournal.com/wp-content/uploads/turning-threaded-lids-illust.jpg)

Threads can only be chased in woods that are close-grained and durable. My absolute favorite is boxwood, but this is hard to find these days and expensive. Other good domestic woods are dogwood, pear and desert ironwood. Most fine-grained tropical woods, such as lignum vitae, cocobolo, ebony, African blackwood and rosewood, also take threads well. A good, cheap material to practice on while learning is MDF.

Because of the nature of wood, it is much easier to create a strong thread in plank grain rather than end grain. This is especially true if using a tap to create an inside thread. While you can get away with most any wood for a plank grain thread, a strong, close-grained wood is imperative for end grain threads. The water-thin variety of cyanoac- rylate applied to plank, and especially end, grain threads greatly aids in producing a strong, full-form helix.

In most chased threads, the internal thread is cut first and the external thread is fitted to it. This is by far the easiest way. If you bring the external thread to a nearly sharp crest and it is still tight, simply sand a larger flat on the crest with some 150-grit sandpaper glued to a piece of wood. Use it like a file and support it on the tool-rest so as to maintain con- centricity. Apply cyanoacrylate, chase the thread deeper, and check the fit. Repeat this process until the fit is perfect.

Practical Use: Boxes

Boxes are a great use for chased threads: you get secure closing with easy lid removal. It is easier for a beginner to cut a fine thread (the chaser picks up the fine thread more easily), but fine threads cross easily in day-to-day use. So, once you obtain the knack of chasing, you will want to graduate to coarser chasers. You can develop your skills by following the process shown in Making a Box with a Threaded Lid, below. We've also provided a video that demonstrated this process.

VIDEO: Chasing Threads

Before beginning to make your box, you'll need to grind a pair of scrapers to be able to put a relief groove in both the internal mortise and external tenon. This allows lifting the chaser at the end of the thread and smoothly making another pass. The beginner will want to make this groove generous: if you hit the shoulder, the thread will be ruined.

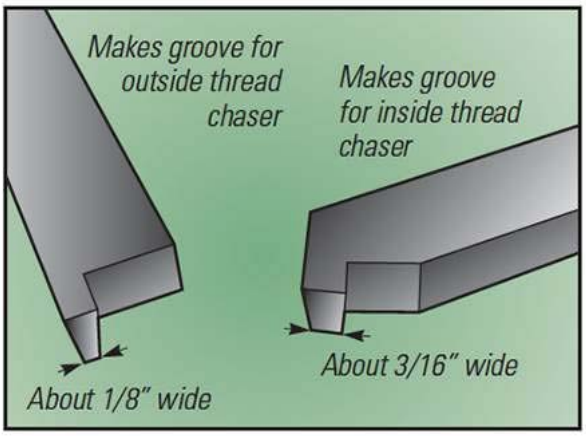

(http://www.woodworkersjournal.com/wp-content/uploads/turning-threaded-lid-chaser.jpg)

Grind scrapers as shown above to make relief grooves that allow you to lift the chaser at the end of a thread.

Although steps 1 and 2, below utilize the same workflow as turning a snap fit lid, including scraping a mortise in the lid, when it comes to step 3, we reach the difference: we now scrape a groove at the end of the mortise to allow the chaser to exit without coming to an abrupt stop and ruining the thread. After step 4, the interior thread is chased. Switching to the body of the box, we turn a very short tenon on the end that is a slide fit with the crest diameter (minor diameter) of the interior thread

(step 5). We now chase the exterior thread to have a root diameter just below this (minor) diameter. We need to scrape a groove for exiting the chaser as shown in the lower illustration on the right side of page 19 and in steps 6 and 7.

It will take some time and practice to master thread chasing, but it is a skill well worth learning. Once you've aced it,take a threaded box to the next turning club meeting and show everyone that you are a regular Thread Astaire.

(http://www.woodworkersjournal.com/wp-content/uploads/turning-threaded-lid-reverse.jpg)

If your lathe is reversible, you can chase from the opposite side of the lathe, and the chaser screws threads out of the lid instead of into it — making an abrupt, thread-destroying stop impossible.

Making a Box with a Threaded Lid

1.

(http://www.woodworkersjournal.com/wp-content/uploads/turning-threaded-lid-1.jpg)

Turn a cylinder from a wood favorable for threading (see page 19; I used dogwood Other good domestic woods are dogwood, pear and desert ironwood. Most fine-grained tropical woods, such as lignum vitae, cocobolo, ebony, African blackwood and rosewood, also take threads well. A good, cheap material to practice on while learning is MDF.) to the diameter of the box you want to make. Chuck the cylinder in a jam chuck and turn the rough shape of your box.

2.

(http://www.woodworkersjournal.com/wp-content/uploads/turning-threaded-lid-2.jpg)

Part the body of the box from the lid.

3.

(http://www.woodworkersjournal.com/wp-content/uploads/turning-threaded-lid-3.jpg)

Hollow out the bulk of the lid's material, then scrape the interior to the desired shape as shown in the lower illustration on the right side of page 19. Scrape the groove next to the shoulder of the mor- tise and chamfer the leading edge to give the chaser an easy start.

4.

(http://www.woodworkersjournal.com/wp-content/uploads/turning-threaded-lid-4.jpg)

Chase the internal thread, supporting the internal chaser on an armrest if you have one. If not, use the tool-rest in the normal way. (Your tool-rest needs to be free of burrs and nicks, and it helps to wax it. The same goes for the armrest.) Use a light touch and engage the face of the chaser to create the screw thread. Exit as the chaser gets to the groove. Pull the chaser back and touch down to pick up the lines left by the first pass. You develop a rhythm: beginning and ending on the right beat is imperative. Timing and a slow spindle speed are key. You touch the bevel of the scraper face so the diagonal ribs can generate a thread. With each touch, twist the chaser slightly more counterclockwise so it starts to scrape a thread. Keep the forward push on the chaser light at all times. Let the tool do the work. This is like learning to dance the shuffle.

5.

(http://www.woodworkersjournal.com/wp-content/uploads/turning-threaded-lid-5.jpg)

Once a good thread is chased, un-chuck the cap and set it aside. Chuck the body of the box and excavate the bulk of the interior with a spindle gouge; then use scrapers ground to the shape you want the inside to be. Now scrape a short tenon that is a slide fit with the crest diameter (minor diameter) of the interior thread.

6.

Print
67
Like
Tweet
Share

(http://www.woodworkersjournal.com/wp-content/uploads/turning-threaded-lid-6.jpg)

Scrape away excess material until you have the bulk of the tenon a bit bigger than the first tenon. (How much bigger depends on the pitch of the thread, with coarse threads needing more material than fine ones.) Scrape a groove at the shoulder of the bigger tenon.

7.

(http://www.woodworkersjournal.com/wp-content/uploads/turning-threaded-lid-7.jpg)

Use the external chaser to chase a thread. Constantly check fit with the cap. Use cyanoacrylate glue and sand down the crests before they come to sharp points!

8.

(http://www.woodworkersjournal.com/wp-content/uploads/turning-a-threaded-lid-8.jpg)

Once the lid fits, screw it in place and turn it to match the rest of the box. Candle wax on the thread makes it much easier to screw and unscrew.

9.

Print
67
Like
Tweet
Share

(http://www.woodworkersjournal.com/wp-content/uploads/turning-threaded-lid-9.jpg)

The finished screw cap box.

Posted in:

- **WOODTURNING (HTTP://WWW.WOODWORKERSJOURNAL.COM/CATEGORY/HOW-TO/WOODTURNING/)**

boxes (http://www.woodworkersjournal.com/tag/boxes/), chase (http://www.woodworkersjournal.com/tag/chase/), chasing (http://www.woodworkersjournal.com/tag/chasing/), lid (http://www.woodworkersjournal.com/tag/lid/), lids (http://www.woodworkersjournal.com/tag/lids/), threaded (http://www.woodworkersjournal.com/tag/threaded/), threads (http://www.woodworkersjournal.com/tag/threads/), turning (http://www.woodworkersjournal.com/tag/turning/), woodturning (http://www.woodworkersjournal.com/tag/woodturning-2/)

RELATED ARTICLES:

Print
67
Like
Tweet
Share

CARVING TEXTURE & PA[illegible]N$ INTO TURNED BO[illegible]

Woodturner Ernie Conover shows options for adding decorative carving to turned bowls, including fluted carving and the use of a veining chisel. The Woodworker's Journal contributor also discusses the best bowl shapes for carving, grain direction concerns, and vise attachment options.

(http://www.woodworkersjournal.com/carving-texture-patterns-turned-bowls/)

CUBIC BORON NITRIDE GRINDING WHEELS

Our woodturning columnist says the newest technology applied to grinding wheels is "the most amazing thing to happen to sharpening in my lifetime."

(http://www.woodworkersjournal.com/cubic-boron-nitride-grinding-wheels/)

0 Comments Woodworker's Journal Login

Recommend 1 Share Sort by Newest

Start the discussion…

Be the first to comment.

ALSO ON WOODWORKER'S JOURNAL

How Should I Seal and Finish Spalted Maple?

1 comment • 18 days ago•

Robert — I have had to work quite a bit with woods with fungi or mold. My general approach, unless there is an over riding ...

How to Make a Picture Frame with Epoxy Inlay Detail

1 comment • 2 months ago•

Bill Leonhardt — Would it not be wise to seal the wood after grooving but before applying the epoxy so as to eliminate ...

Trend® FX Extreme Sharpening Stone

1 comment • a month ago•

Scott Grogan — Your first picture in this article is a great example of how to slice your hand in a major way. What exactly ...

Toy Furniture and an AT-ST Walker

1 comment • 6 days ago•

Cutwould — I like what you have done. Consider doing Horse Barns with tack rooms, grooming corridor etc with a ...

Subscribe Add Disqus to your site Add Disqus Add Privacy

ORDER WOODWORKING PLANS, DVDS AND SUPPLIES (HTTP://WWW.ROCKLER.COM/WOODWORKERS-JOURNAL?SID=WJHP)

Previous

Woodworker's Journal 25 Jigs and Fixtures, CD

$14.99

(http://www.rockler.com/woodworkers-journal-25-jigs-and-fixtures-cd?sid=WJHP)

Woodworker's Journal Power Tool Maintenance DVD-ROM

$9.99

(http://www.rockler.com/woodworkers-journal-power-tool-maintenance-dvd-rom?sid=WJHP)

Woodworker's Journal 25 Outdoor Projects CD

$14.99

(http://www.rockler.com/woodworkers-journal-25-outdoor-projects-cd?sid=WJHP)

Woodworker's Journal Toys and Games CD

$14.99

(http://www.rockler.com/woodworkers-journal-toys-and-games-cd?sid=WJHP)

Sewing Machine Cabinet Plan

$7.39

(http://www.rockler.com/woodworkers-sewing-machine-cabinet-plan?sid=WJHP)

Next

Print

67 Like

Tweet

Share

HOW-TO (HTTP://WWW.WOODWORKERSJOURNAL.COM/CATEGORY/HOW-TO/)

Woodworking Skills (http://www.woodworkersjournal.com/category/how-to/woodworking-skills/)

Project Design (http://www.woodworkersjournal.com/category/how-to/woodworking-skills/project-design/)

Milling (http://www.woodworkersjournal.com/category/how-to/woodworking-skills/milling/)

Cutting (http://www.woodworkersjournal.com/category/how-to/woodworking-skills/cutting/)

Drilling (http://www.woodworkersjournal.com/category/how-to/woodworking-skills/drilling/)

Shaping (http://www.woodworkersjournal.com/category/how-to/woodworking-skills/shaping/)

Joining and Fastening (http://www.woodworkersjournal.com/category/how-to/woodworking-skills/joining-and-fastening/)

Gluing and Clamping (http://www.woodworkersjournal.com/category/how-to/woodworking-skills/gluing-and-clamping/)

Finishing (http://www.woodworkersjournal.com/category/how-to/woodworking-skills/finishing/)

Making Repairs (http://www.woodworkersjournal.com/category/how-to/woodworking-skills/making-repairs/)

Tips and Techniques (http://www.woodworkersjournal.com/category/how-to/tips-and-techniques/)

Jigs and Tools (http://www.woodworkersjournal.com/category/how-to/tips-and-techniques/jigs-and-tools/)

Woodturning (http://www.woodworkersjournal.com/category/how-to/woodturning/)

PLANS (HTTP://WWW.WOODWORKERSJOURNAL.COM/CATEGORY/PLANS/)

Free Plans (http://www.woodworkersjournal.com/category/plans/free-plans/)

Premium Plans (http://www.woodworkersjournal.com/category/premium-content/premium-plans/)

Plans for Sale (http://www.rockler.com/woodworkers-journal?sid=WJHP)

VIDEOS (HTTP://WWW.WOODWORKERSJOURNAL.COM/VIDEOS/)

Free Videos (http://www.woodworkersjournal.com/videos/)

Premium Videos (http://www.woodworkersjournal.com/premium-videos/)

PREMIUM CONTENT (HTTP://WWW.WOODWORKERSJOURNAL.COM/DMT-DIASPRAY-HONING-LIQUID/N344TPDMT-DIASPRAY/)

Premium Articles (http://www.woodworkersjournal.com/category/premium-content/)

Premium Plans (http://www.woodworkersjournal.com/category/premium-content/premium-plans/)

Premium Videos (http://www.woodworkersjournal.com/premium-videos/)

Back Issue Archive (http://www.woodworkersjournal.com/category/magazine-back-issue-archive/)

MAGAZINE (HTTP://WWW.WOODWORKERSJOURNAL.COM/CATEGORY/MAGAZINE/)

Latest Issue (http://www.woodworkersjournal.com/category/magazine-latest-issue/)

Subscribe (https://subs.thewoodworkersjournal.com/servlet/OrdersGateway?cds_mag_code=WWJ&cds_page_id=206634)

More on the Web (http://www.woodworkersjournal.com/magazine/more-on-the-web/)

Woodworker's Marketplace (http://www.woodworkersjournal.com/woodworkers-marketplace/)

Woodworker's Journal Back Issue Archive (http://www.woodworkersjournal.com/category/magazine-back-issue-archive/)

Blogs (http://www.woodworkersjournal.com/category/blogs/)

Editor's Blogs (http://www.woodworkersjournal.com/category/blogs/editors-blogs/)

Contributing Bloggers (http://www.woodworkersjournal.com/category/blogs/contributing-bloggers/)

Trade Shows (http://www.woodworkersjournal.com/category/premium-shows/)

Tool Reviews (http://www.woodworkersjournal.com/category/tools-and-supplies/tool-reviews/)

EZINE (HTTP://WWW.WOODWORKERSJOURNAL.COM/CATEGORY/EZINE/LATEST-ISSUE/)

Latest Issue (http://www.woodworkersjournal.com/category/ezine/latest-issue/)

Subscribe (http://www.woodworkersjournal.com/ezine/subscribe/)

eZine Archive (http://www.woodworkersjournal.com/ezine/ezine-archive/)

Today's Woodworker (http://www.woodworkersjournal.com/category/todays-woodworker/)

Industry Interviews (http://www.woodworkersjournal.com/category/tools-and-supplies/industry-interviews/)

Tricks of the Trade (http://www.woodworkersjournal.com/category/how-to/tips-and-techniques/tricks-of-the-trade/)

What's In Store (http://www.woodworkersjournal.com/category/tools-and-supplies/whats-in-store/)

Q&A (http://www.woodworkersjournal.com/category/q-and-a/)

Reader's Project Gallery (http://www.woodworkersjournal.com/category/readers-project-gallery/)

Crossword Puzzle (http://www.woodworkersjournal.com/ezine/crossword-puzzle/)

Feedback (http://www.woodworkersjournal.com/category/feedback/)

STORE (HTTP://WWW.WOODWORKERSJOURNAL.COM/CATEGORY/STORE/?SID=WJHP)

CUSTOMER SERVICE (HTTPS://W1.BUYSUB.COM/CDS_PAGE_ID=63085&CDS_MAG_CODE=WWJ)

Pay My Bill (https://w1.buysub.com/pubs/RK/WWJ/cds_page_id=63085&cds_mag_code=WWJ)

Gift Subscription (https://w1.buysub.com/servlet/GiftsGateway?cds_mag_code=WWJ&cds_page_id=63085)

Change of Address (https://w1.buysub.com/servlet/CSGateway?cds_mag_code=WWJ)

Contact Us (http://www.woodworkersjournal.com/contact-us/)

© Woodworker's Journal • Site Credits (http://www.windmilldesign.com/portfolio/web-design-and-development-for-woodworkers-journal)

Subscribe ›

Print

67 Like

Tweet

Share

Advertising Info (http://www.woodworkersjournal.com/advertisements/advertising-information/) • Privacy (http://www.woodworkersjournal.com/privacy/)